SenseDSL: Automating the Integration of Sensors for MCU-based Robots and Cyber-Physical Systems

CHALMERS | UNIVERSITY OF GOTHENBURG

2007 DARPA Urban Challenge

Autonomously driving vehicle *Caroline* participating in the 2007 DARPA Urban Challenge.

Experimental Miniature Vehicle Fleet

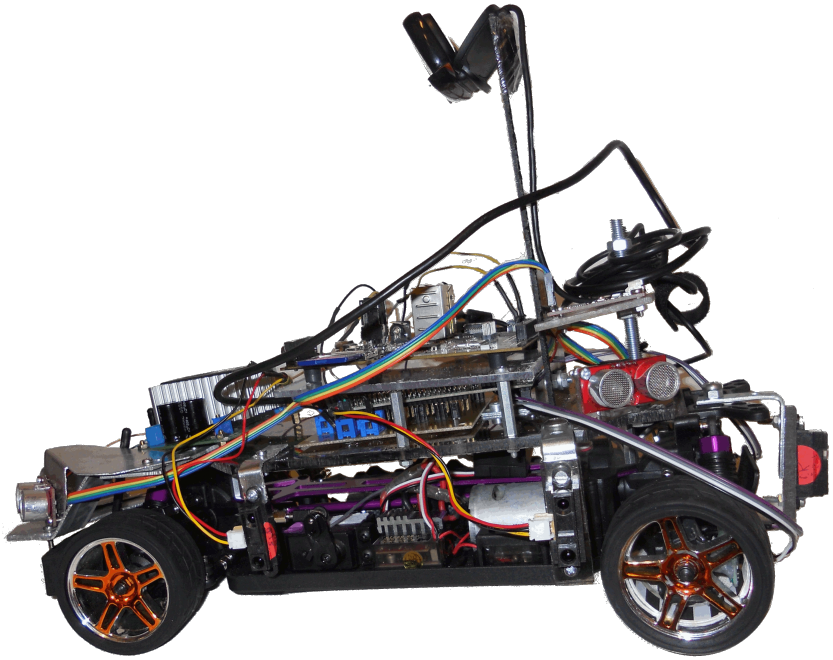

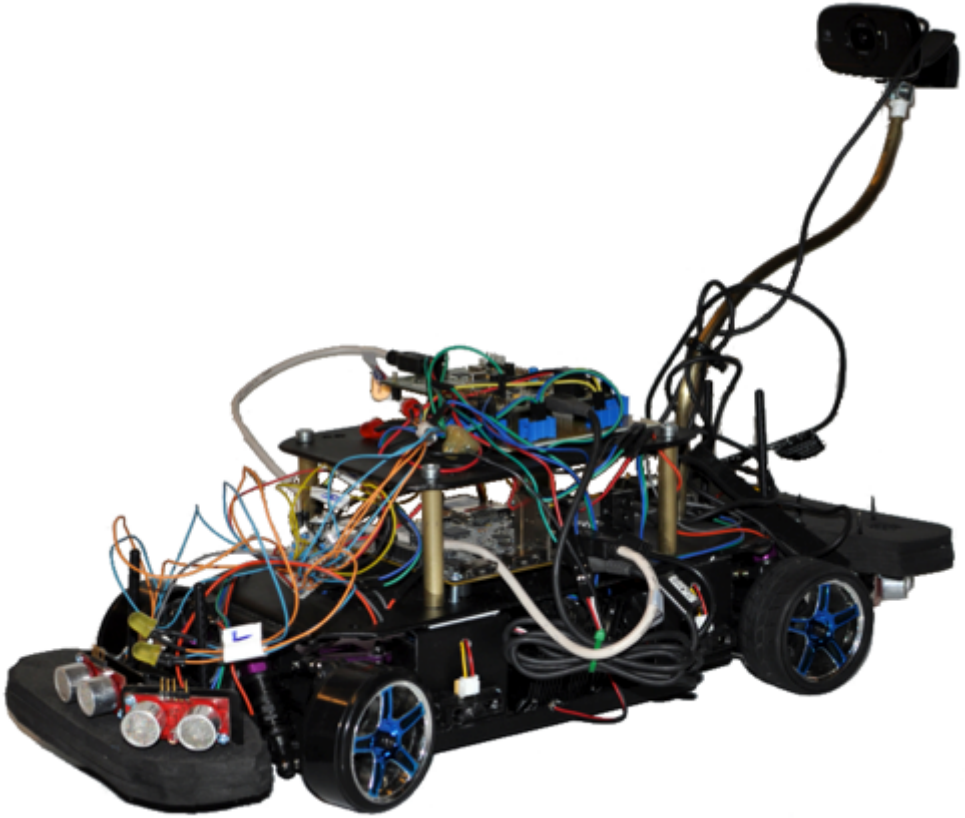

Experimental Miniature Vehicle Fleet

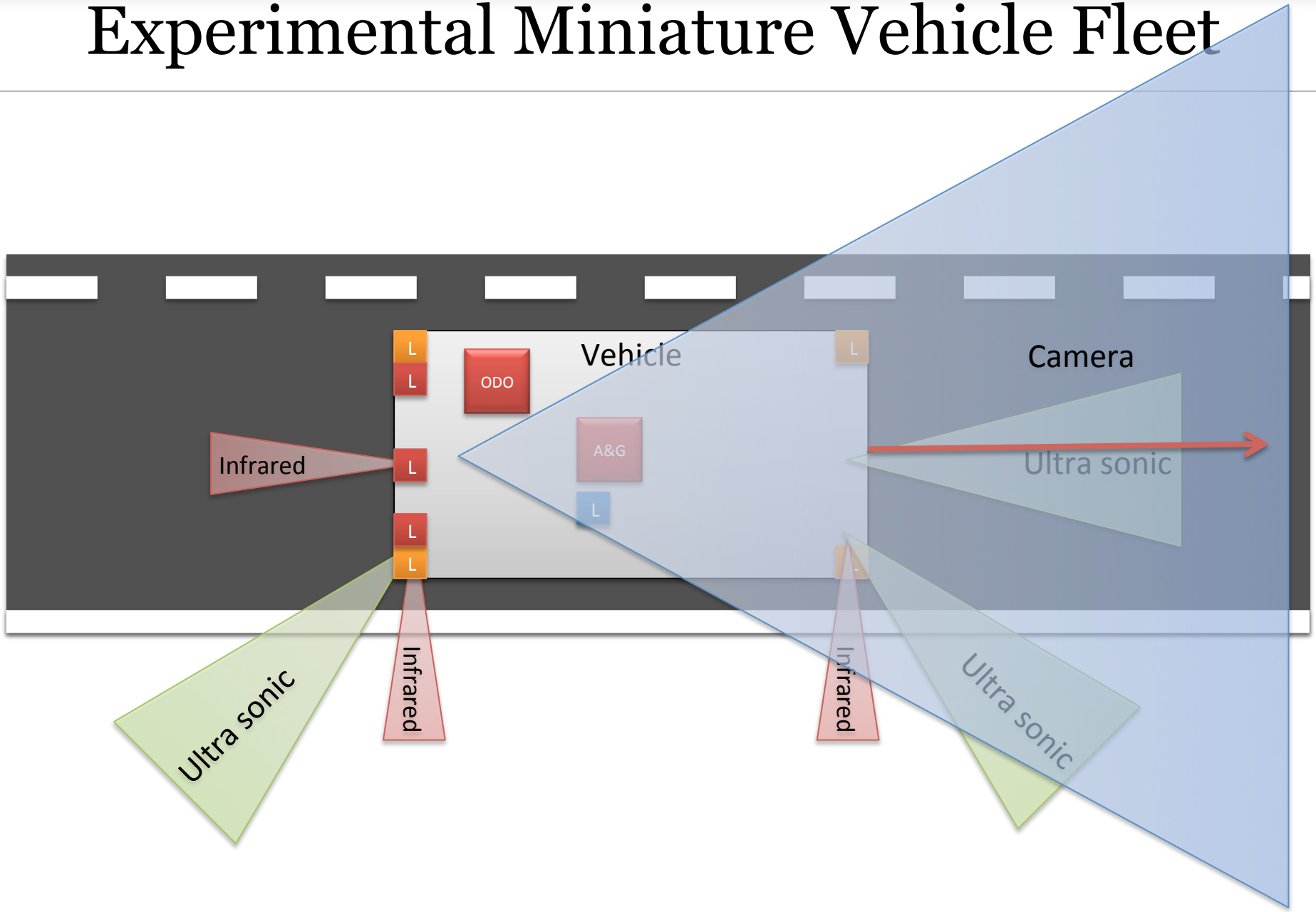

Experimental Miniature Vehicle Fleet

Component	Component ID	Connection Type
RC Vehicle	1/10 scale electrically driven on-road vehicle	
Infrared Sensor	SHARP GP2D120	ADC
Ultrasonic Sensor	Devantech SRF08	I2C
Camera	Logitech c525	USB
Steer/Servo		PWM
ESC	1/10 Brushless ESC	PWM
Motor	1/10 Brushless Motor	
LED Board	Self-assembled	ADC
Razor Board	Razor-9DoF-IMU	UART
Discovery Board	STM32F4-Discovery	USB
Application Board	PandaBoard ES	USB
RC-Handset	A3-STX Deluxe F.H.S.S	Wireless
RC Receiver	A3-RX Deluxe F.H.S.S	Wireless

Engineering the HW/SW interface

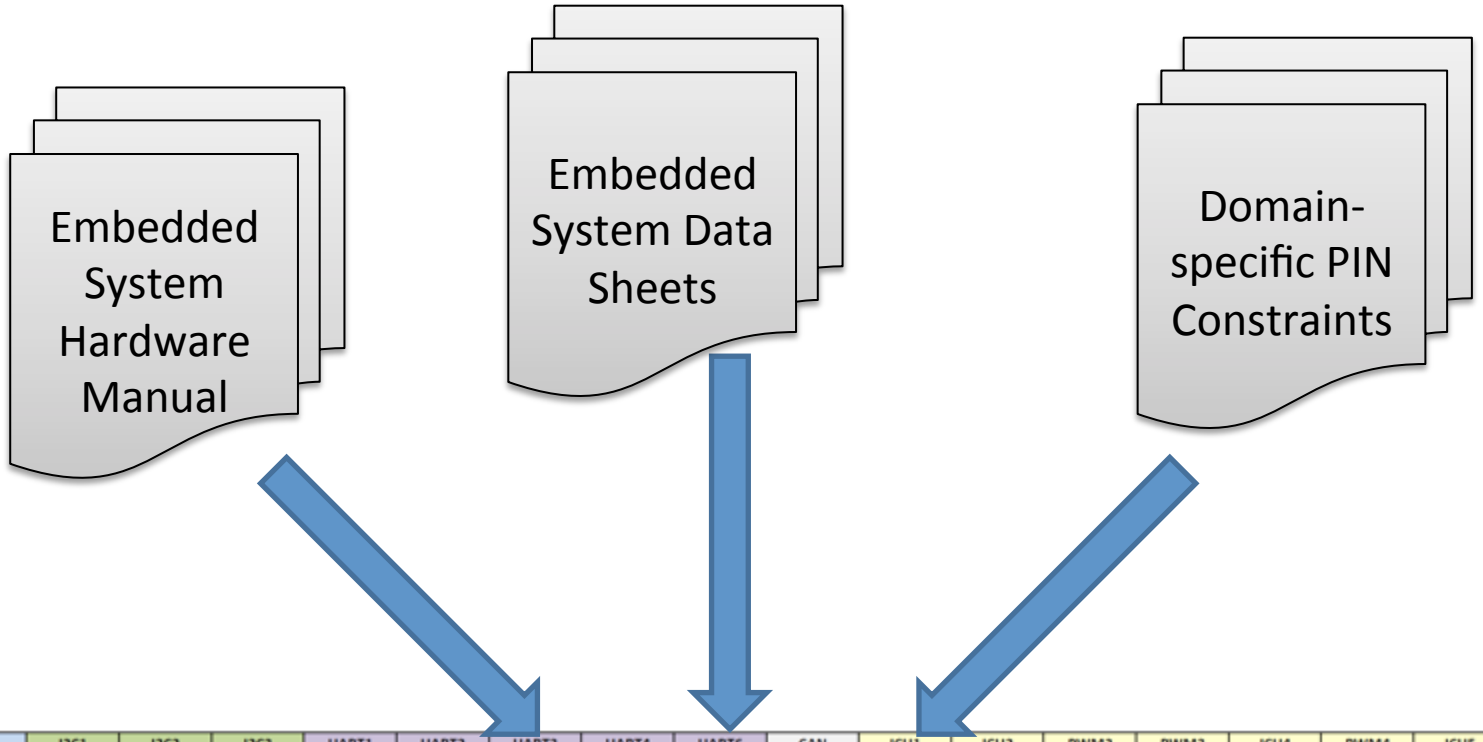

Pin	ADC1	I2C1	I2C2	I2C3	UART1	UART2	UART3	UART4	UART6	CAN	ICU1	ICU2	PWM2	PWM3	ICU4	PWM4	ICU5	PWM5	PWM6	ICU10
PA1	ADC1-IN1											TIM2_CH2					TIM5_CH2			
PA2	ADC1-IN2					UART2-TX							TIM2_CH3					TIM5_CH3		
PA3	ADC1-IN3					UART2-RX							TIM2_CH4					TIM5_CH4		
PA8				I2C3-SCL							TIM1_CH1									
PB0	ADC1-IN8													TIM3_CH3						
PB1	ADC1-IN9													TIM3_CH4						
PB6		I2C1-SCL			UART1-TX															
PB7					UART1-RX										TIM4_CH2					
PB8										CAN1-RX						TIM4_CH3				TIM10_CH1
PB9		I2C1-SDA								CAN1-TX										
PB10			I2C2-SCL				UART3-TX													
PB11			I2C2-SDA				UART3-RX						TIM2_CH4							
PC6									UART6-TX					TIM3_CH3					TIM8_CH3	
PC9				I2C3-SDA										TIM3_CH4					TIM8_CH4	
PC10							UART3-TX	UART4-TX												
PC11							UART3-RX	UART4-RX												

Engineering the HW/SW interface

- Total 14,689,111 configuration possibilities
- Verification of a given pin assignment configuration
- Finding a feasible/all possible/best pin assignment configuration for the interface board

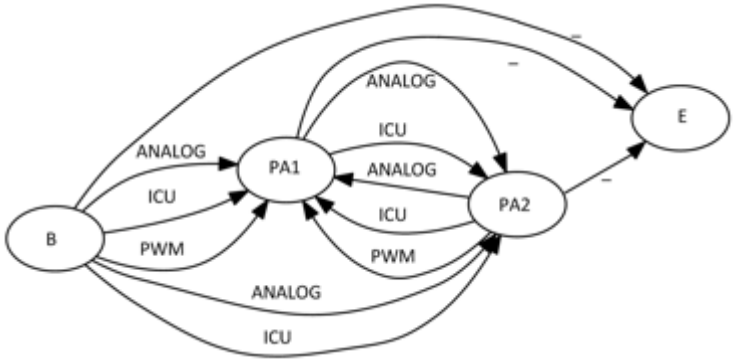

$$C_{|M|=1}^{|N|} = \sum_{k=1}^{L} \binom{|N|}{k} = \sum_{k=1}^{L} \frac{|N|!}{(|N|-k)!k!}$$

$$K(n,m) = \begin{cases} 1 + \sum_{p=1}^{n} * K(p, m-1) & \text{if } m > 1, \\ 1 & \text{otherwise} \end{cases}$$

$$C_{|M|}^{|N|} = \sum_{k=1}^{L} \binom{|N|}{k} * K(k, |M|)$$

Pin	ADC1	I2C1	I2C2	I2C3	UART1	UART2	UART3	UART4	UART6	CAN	ICU1	ICU2	PWM2	PWM3	ICU4	PWM4	ICU5	PWM5	PWM6	ICU10
PA1	ADC1-IN1											TIM2_CH2					TIM5_CH2			
PA2	ADC1-IN2					UART2-TX							TIM2_CH3					TIM5_CH3		
PA3	ADC1-IN3					UART2-RX							TIM2_CH4					TIM5_CH4		
PA8				I2C3-SCL							TIM1_CH1									
PB0	ADC1-IN8													TIM3_CH3						
PB1	ADC1-IN9													TIM3_CH4						
PB6		I2C1-SCL			UART1-TX															
PB7					UART1-RX										TIM4_CH2					
PB8										CAN1-RX						TIM4_CH3				TIM10_CH1
PB9		I2C1-SDA								CAN1-TX										
PB10			I2C2-SCL				UART3-TX													
PB11			I2C2-SDA				UART3-RX						TIM2_CH4							
PC6									UART6-TX					TIM3_CH3					TIM8_CH3	
PC9				I2C3-SDA										TIM3_CH4					TIM8_CH4	
PC10							UART3-TX	UART4-TX												
PC11							UART3-RX	UART4-RX												

Mamun, Berger, and Hansson: Engineering the Hardware/Software Interface for Robotic Platforms – A Comparison of Applied Model Checking with Prolog and Alloy. DSLRob'13

Engineering the HW/SW interface

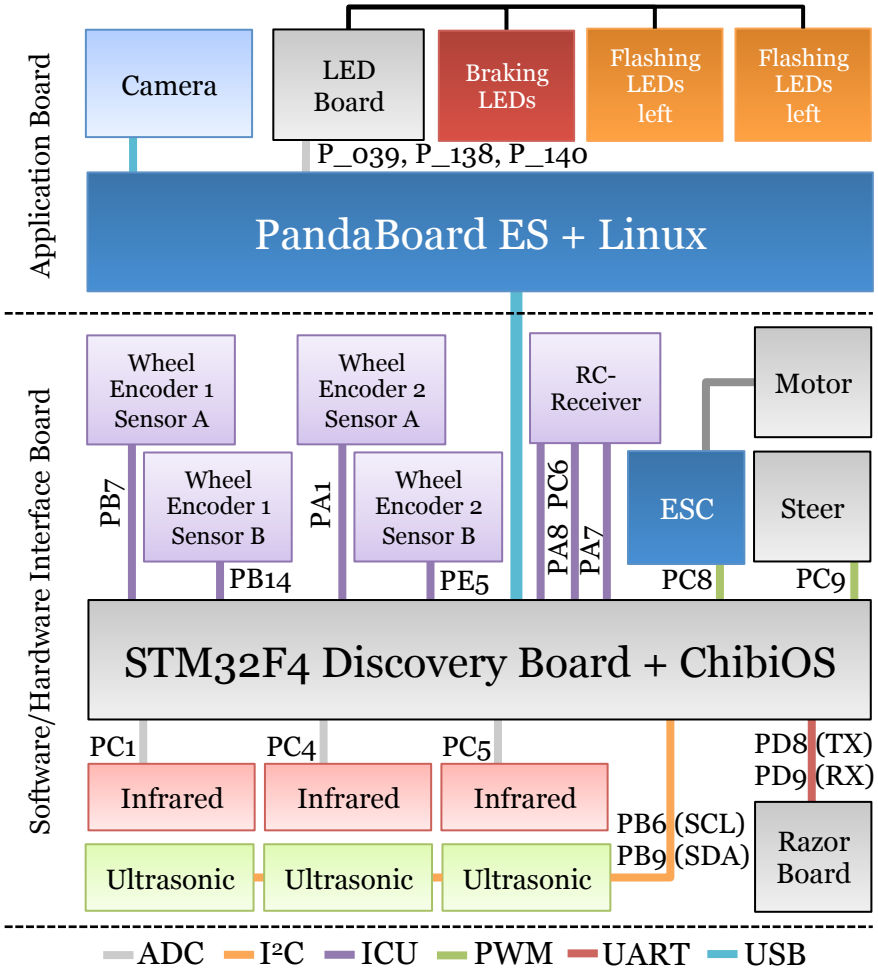

Engineering the HW/SW interface

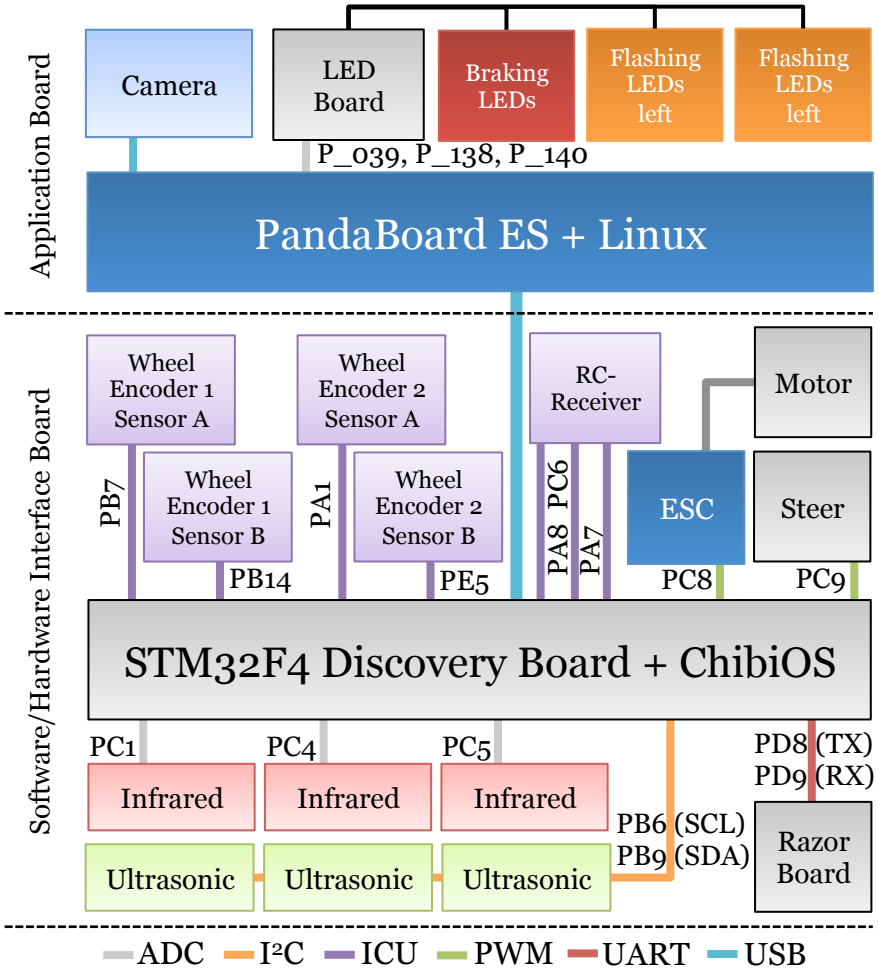

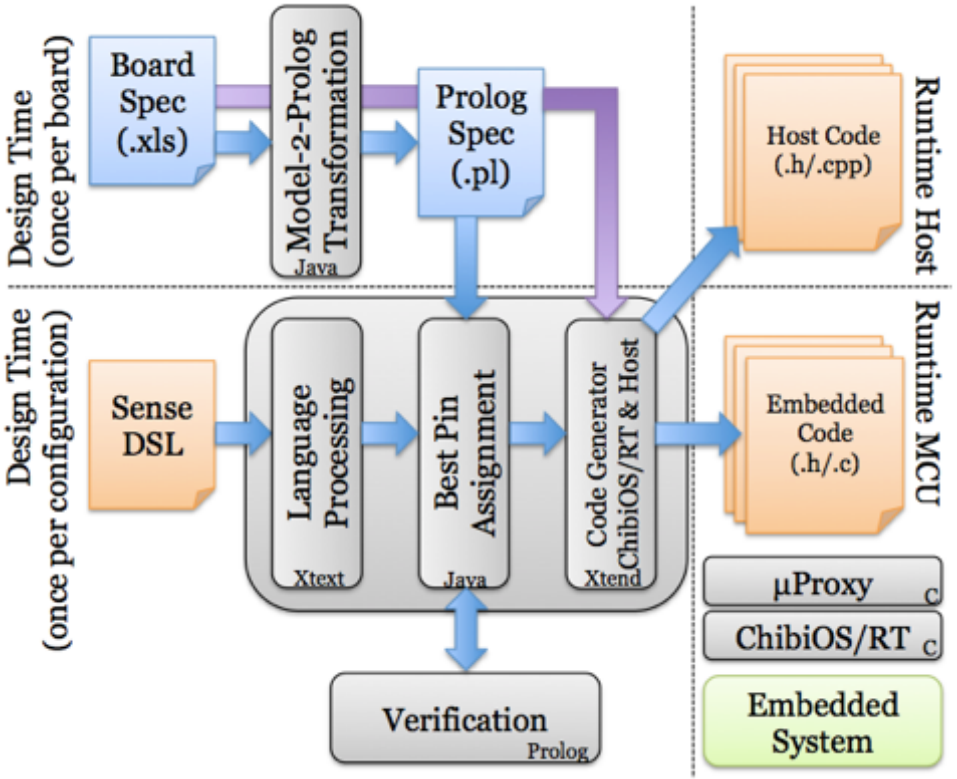

Model Checking & Code Generation

Pin	ADC1	I2C1	I2C2	I2C3	UART1	UART2	UART3	UART4	UART6
PA1	ADC1-IN1								
PA2	ADC1-IN2					UART2-TX			
PA3	ADC1-IN3					UART2-RX			
PA8				I2C3-SCL					
PB0	ADC1-IN8								
PB1	ADC1-IN9								
PB6		I2C1-SCL			UART1-TX				
PB7					UART1-RX				
PB8									
PB9		I2C1-SDA							
PB10			I2C2-SCL				UART3-TX		
PB11			I2C2-SDA				UART3-RX		
PC6									UART6-TX
PC9				I2C3-SDA					
PC10							UART3-TX	UART4-TX	
PC11							UART3-RX	UART4-RX	

```
board STM32F4DiscoveryBoard {
    sensor IRFront returns uint16 {
        id = 17;
        type = analog;  // infrared
    }
    sensor IRFrontRight returns uint16 {
        id = 18;
        type = analog;
        delay = 60;
    }
    sensor USRear returns uint8 {
        id = 19;
        type = i2c;     // ultrasonic
        address = 0xE6;
        delay = 40;
        prio = +2;
    }
    sensor WheelEncoder returns uint32 {
        id = 20;
        type = icu;
    }
}
```

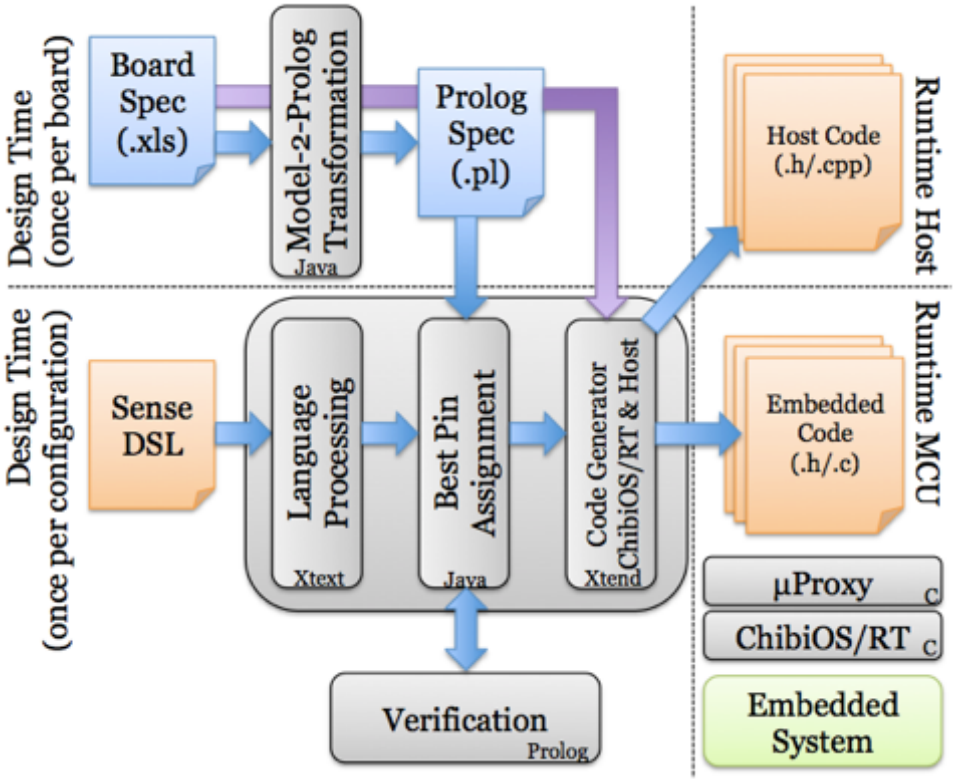

Model Checking & Code Generation

Pin	ADC1	I2C1	I2C2	I2C3	UART1	UART2	UART3	UART4	UART6
PA1	ADC1-IN1								
PA2	ADC								
PA3	ADC								
PA8									
PB0	ADC								
PB1	ADC								
PB6									
PB7									
PB8									
PB9									
PB10									
PB11									
PC6									-TX
PC9									
PC10									
PC11									

```
1  board STM32F4DiscoveryBoard {
2      sensor IRFront returns uint16 {
3          id = 17;
4          type = analog;   // infrared
5      }
6      sensor IRFrontRight returns uint16 {
7          id = 18;
8          type = analog;
9          delay = 60;
10     }
11     sensor USRear returns uint8 {
12         id = 19;
13         type = i2c;      // ultrasonic
14         address = 0xE6;
15         delay = 40;
16         prio = +2;
17     }
18     sensor WheelEncoder returns uint32 {
19         id = 20;
20         type = icu;
21     }
22 }
```

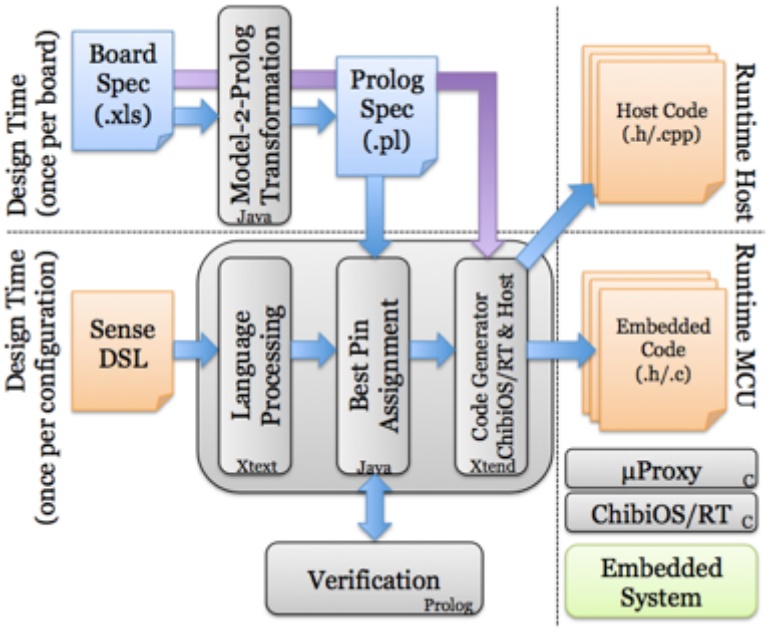

DSL Element		Verification & Pin Assignment	Code Generation during the *SenseDSL* Workflow							
			ChibiOS/RT							Host Application
			Sensor				Sensor Data		Task Scheduling	
			Configuration			Reading	Storing	Serialization		Deserialization
			ADC	I²C	ICU					
	board's name	○	○	○	○	○	○	○	○	○
sensor attribute	name	○	○	○	●	●	●	●	○	●
sensor attribute	return type	○	○	○	○	●	●	●	○	●
sensor attribute	identifier	○	○	○	○	○	○	●	○	●
sensor attribute	type	●	●	●	●	●	○	○	●	○
sensor attribute	address	○	○	●	○	●	○	○	○	○
sensor attribute	delay	○	○	○	○	○	○	○	●	○
sensor attribute	prio	○	○	○	○	○	○	○	●	○
	inferred pin	○	●	●	●	○	○	○	○	○

Conclusion

- HW/SW integration is a constraint-satisfaction problem
- Engineering the HW/SW interface with MDE:
  - Our embedded system: >14.5 million configuration possibilities
  - Automated verification of a given pin assignment configuration
  - Side effect: Finding a feasible/all possible/best pin assignment configuration for the interface board
- Intuitive workflow:
  - Description of facts
  - Description of desired setup
  - Let model transformation automagically do the rest!

http://www.christianberger.net/uproxy